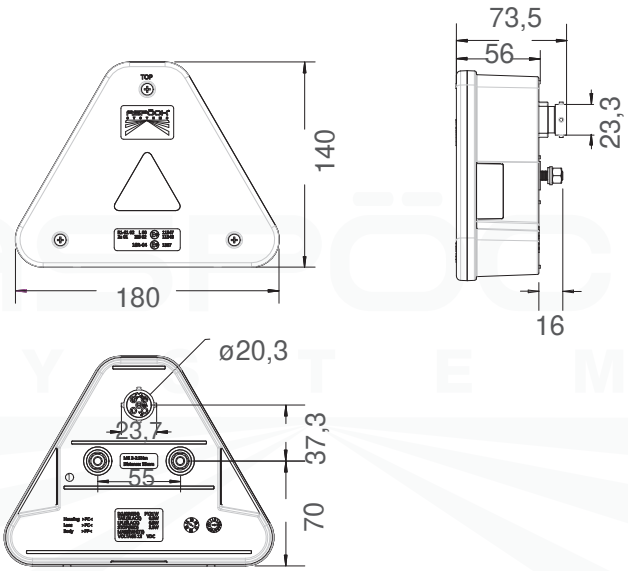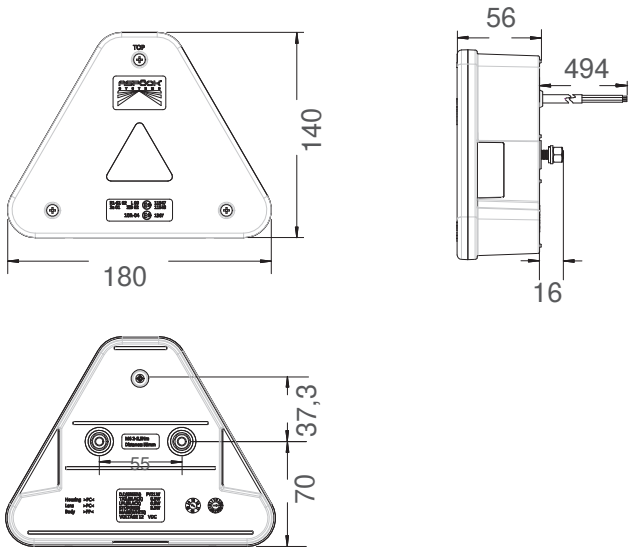Agripoint
Schluss-Brems-Blinkleuchte
tail, stop and direction indicator