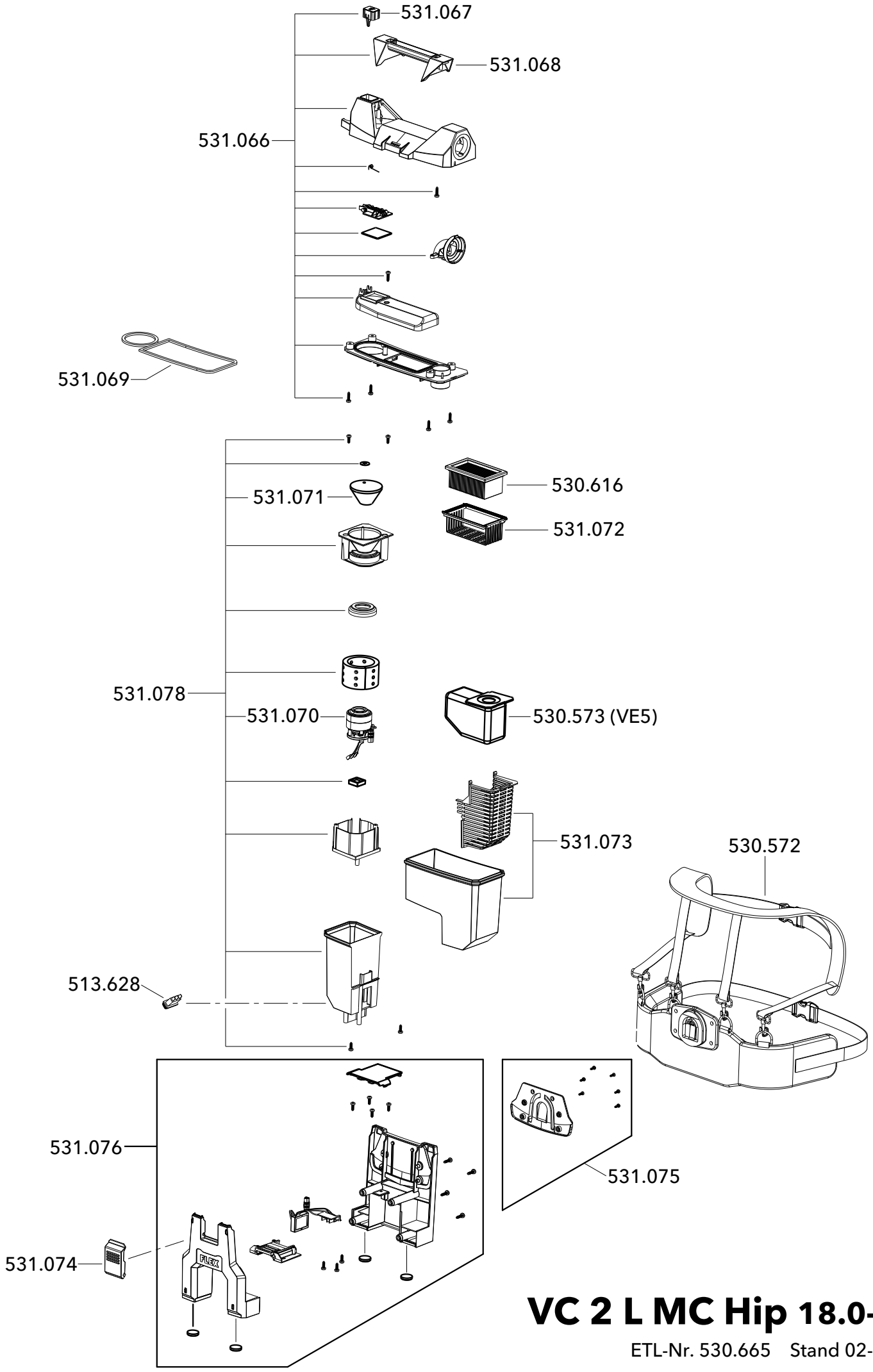

VC 2 L MC Hip 18.0-EC

ETL-Nr. 530.665 Stand 02-2023